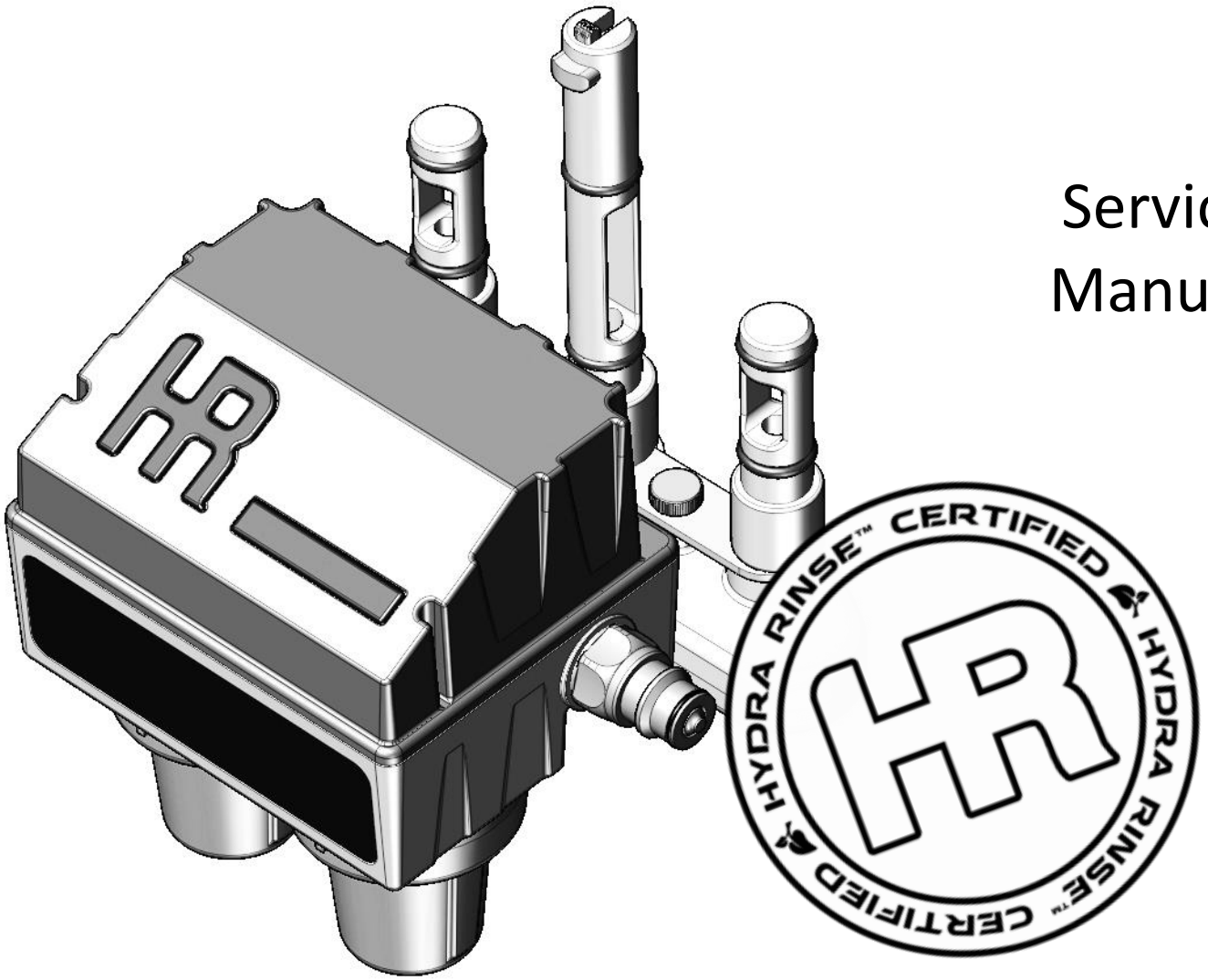

Service Manual

HYDRA RINSE™

CLEANS SIMPLE. SAFE. QUICK.

© COPYRIGHT HYDRA RINSE™ LLC | ALL RIGHTS RESERVED

Table of Contents

Section 1: Safety Considerations 4

1.1 - List of Safety Symbols Used in HR Series Manuals 4

1.2 - Safety Precautions 4

1.2a - Important Message 4

1.2b - Water/ Temperature 4

1.2c - Batteries 5

1.2d - WSF128-169 Portable Wandstation 5

1.2e - LEXX™ Sanitizer & Cleaning Solution 5

1.2f - NSF Listings 6

1.2g – NSF Listing, WSF128-169 7

Section 2 - Product Information 8

2.1 - Product Information – Pro-Control 8

2.2 – List of Parts 9

2.2a - Pro-Control 9

2.2b - Wand Handle Assembly 10

2.2c - Wand Metering Assembly 11

Section 3 - System Details 12

3.1 - Key Components Description 12

3.1a – Keypad/User Interface 12

3.1b – Solution Cup Housings 13

3.1c – HR Logo 14

3.1d – Token Tag 15

3.1e - Manifold 16

3.1f – Water Hose Supply 17

3.1g– Bypass Tube System 18

3.1h – WSF128-169 Metering Assembly 19

3.1i - WSF128-169 Wand Handle Assembly 20

3.1j - WSF128-169 Wand Hose Assembly 21

Section 4 - Troubleshooting 22

4.1 – LED Blink Codes 22

4.2 - Error Code List 23

4.2a - E1 – No Tokens 23

4.2b - E2 – No Script 23

4.2c - E3 – Low Battery 23

4.2d - E4 – Memory Storage Full 24

© COPYRIGHT HYDRA RINSE™ LLC | ALL RIGHTS RESERVED

4.3 - Troubleshooting Guide by Symptom 25

Section 5 – Inspection 27

5.1 - Visual Inspection 27

Section 6 – Maintenance 28

6.1 - Pro-Control 28

6.1a - "SELF CLEAN" 28

6.1b - Pro-Control Tune-up Kit 28

6.2 - WSF128-169 Wandstation 29

Section 7 - Replacement of Parts 31

7.1 - Battery Replacement 31

Section 8 - Components Diagram and Part List 32

8.1 - WSF128-169 Wandstation 32

8.2 - Pro-Control Module 33

8.3 - Manifold 34

8.4 - Bypass Systems 35

8.5 - Consumables 36

8.5a - Pro-Control Tune-Up Kits 36

8.5b - Machine Tune-Up Kits 36

8.5c - Machine Upgrade Kits 36

8.5d - Chemical and Wipes 37

8.6 - Accessories 37

Section 9 – Warranty 38

9.1 - WSF128-169 Portable Wandstation 38

9.2 - Pro-Control 39

© COPYRIGHT HYDRA RINSE™ LLC | ALL RIGHTS RESERVED

Section 1: Safety Considerations

1.1 - List of Safety Symbols Used in HR Series Manuals

Attention, Safety Concern

Attention, Suggested

Read Included Instructions

Fact, Note or Detail

NSF International

EPA, Environmental Protection Agency

Hydra Rinse Certified

1.2 - Safety Precautions

Implementation with any one of our products requires a thorough understanding of factory recommendations; complete knowledge of this Service Manual is recommended.

1.2a - Important Message

Failures to adhere to the listed safety precautions may result in severe personal injury or even death. Personal, unauthorized service or repairs to this unit may result in inadvertent damage and excessive service repair expense.

1.2b - Water/ Temperature

Do not operate TAYHR with water temperatures above 120°F (48.9°C).

© COPYRIGHT HYDRA RINSE™ LLC | ALL RIGHTS RESERVED

1.2c - Batteries

The TAYHRPC Pro-Control is designed for non-rechargeable batteries with an expected life cycle of approximately six months. Regular “C dry-cell batteries" can be exposed to some water for a short period of time; if this happens, make sure batteries are fully dried off before inserting into the TAYHRPC Pro-Control Housing.

Never change or remove the batteries when water is present. Find a dry, clean area when replacing batteries. Since the TAYHRPC Pro-Control is always near water, never substitute "dry-cell batteries" for any rechargeable batteries that operate with any type of electronics, i.e. li-ion. Use professional Alkaline Batteries only.

If water enters into the TAYHRPC Pro-Control Housing, discontinue use immediately. Allow unit to air dry for 2 to 3 hours. If unit fails to operate correctly, replacement will be required; this failure is not covered under warranty.

1.2d - WSF128-169 Portable Wandstation

Never directly point the wand at anyone, for any reason. Never insert the Wand Tip into any orifice of any food dispensing device while beaters are in motion. Never insert the Wand Tip into any electrically-powered food equipment that may allow access to electrical circuitry/components. When possible, always power off equipment before servicing to avoid injury or electrocution and damage to device.

1.2e - LEXX™ Sanitizer & Cleaning Solution

Efficacy data, SDS sheets and handling instructions can be located at: PRONATURALBRANDS.COM.

© COPYRIGHT HYDRA RINSE™ LLC | ALL RIGHTS RESERVED

1.2f - NSF Listings

NSF International

OFFICIAL LISTING

NSF International Certifies that the products appearing on this Listing conform to the requirements of NSF/ANSI Standard 6 - Dispensing Freezers

This is the Official Listing recorded on May 24, 2016.

NSF/ANSI 6
Dispensing Freezers

Hydra Rinse, LLC
7870 Lehigh Crossing Road
Suite 1
Victor, NY 14564
United States

Facility : Victor, NY

COMPONENTS:

Hydra Rinse Cleaning/Sanitizing System for Soft Serve Ice Cream Machines[1]
HRF1-0

[1] This model can only be used with the following models of soft serve freezers when installed in accordance with manufacturer's instructions: Taylor Company 336-XX, 337-XX, 338-XX, 339-XX, 358-XX, 359-XX, 791-XX, 793-XX, 794-XX, (8)750-XX, (8)751-XX, C706-XX, C707-XX, C712-XX, C713-XX, C722-XX, C723-XX, C723 F/B-XX.

Note: Additions shall not be made to this document without prior evaluation and acceptance by NSF International.

1 of 1

C0218822

789 N. Dixboro Road, Ann Arbor, Michigan 48105-9723 USA
1-800-NSF-MARK / 734-769-8010
www.nsf.org

© COPYRIGHT HYDRA RINSE™ LLC | ALL RIGHTS RESERVED

NSF International

OFFICIAL LISTING

NSF International Certifies that the products appearing on this Listing conform to the requirements of NSF/ANSI Standard 6 - Dispensing Freezers

This is the Official Listing recorded on May 24, 2016.

NSF/ANSI 6
Dispensing Freezers

Hydra Rinse, LLC
7870 Lehigh Crossing Road
Suite 1
Victor, NY 14564
United States

Facility : Victor, NY

COMPONENTS:

Hydra Rinse Cleaning/Sanitizing System for Soft Serve Ice Cream Machines[1]
HRF1-0

[1] This model can only be used with the following models of soft serve freezers when installed in accordance with manufacturer's instructions: Taylor Company 336-XX, 337-XX, 338-XX, 339-XX, 358-XX, 359-XX, 791-XX, 793-XX, 794-XX, (8)750-XX, (8)751-XX, C706-XX, C707-XX, C712-XX, C713-XX, C722-XX, C723-XX, C723 F/B-XX.

Note: Additions shall not be made to this document without prior evaluation and acceptance by NSF International.

1 of 1

C0218822

789 N. Dixboro Road, Ann Arbor, Michigan 48105-9723 USA
1-800-NSF-MARK / 734-769-8010
www.nsf.org

© COPYRIGHT HYDRA RINSE™ LLC | ALL RIGHTS RESERVED

Section 2 - Product Information

2.1 - Product Information – Pro-Control

Hydra Rinse™ designs and manufacturers devices engineered to improve the cleaning process performed on soft-serve frozen dessert machines. Due to the individual variations from models within machine manufacturers' product lines, there are Hydra Rinse™ systems designed specifically for various frozen dessert machines.

HR Series Model	Specific Model Variations
TAYHR336	Multi Flavor, "White Door," Gravity, Freezer Cylinder Capacity – 2.8 QT
TAYHR358	Single Flavor, Shake Machine, Gravity, Freezer Cylinder Capacity – 7.0 QT
TAYHR706	Single Flavor, "Black Door," Pump, Freezer Cylinder Capacity – 3.4 QT Note: *OEM Door with permanently molded Star Cap is not compatible with the Hydra Rinse Series Pro-Control Module*
TAYHR712	Multi Flavor, "Black Door," Pump, Freezer Cylinder Capacity – 3.4 QT
TAYHR713	Multi Flavor, "Black Door," Gravity, Freezer Cylinder Capacity - 3.4 QT
TAYHR722	Multi Flavor, "Black Door," Pump, Countertop, Freezer Cylinder Capacity – 2.8 QT
TAYHR723	Multi Flavor, "Black Door," Gravity, Countertop, Freezer Cylinder Capacity – 2.8 QT
TAYHR794	Multi Flavor, "White Door," Gravity, Freezer Cylinder Capacity – 3.4 QT

© COPYRIGHT HYDRA RINSE™ LLC | ALL RIGHTS RESERVED

2.2 – List of Parts

2.2a - Pro-Control

Item #	Name
1	HR Logo
2	Top Cover
3	Battery Bracket Screws
4	3/8” Plug
5	Manifold Screws
6	Input Manifold
7	RFID Antenna Sticker
8	Control Board
9	Board Bracket Screws
10	Keypad
11	Valve
12	Cover, Main Body
13	Battery Board
14	Pro-Control Main Body
15	Main Body Screws
16	Solution Cup O-rings
17	Solution Cup - Left
18	Solution Cup - Right
19	Manifold Thumb Screws
20	Gore Vent
21	Gore Vent Nut
22	Check Valve
23	Male Quick Connect
24	Quick Connect Washer
25	O-Ring, Input Manifold
26	Data Plate
27	Battery Harness
28	Battery Box
29	Battery Bracket
30	Foam Seal

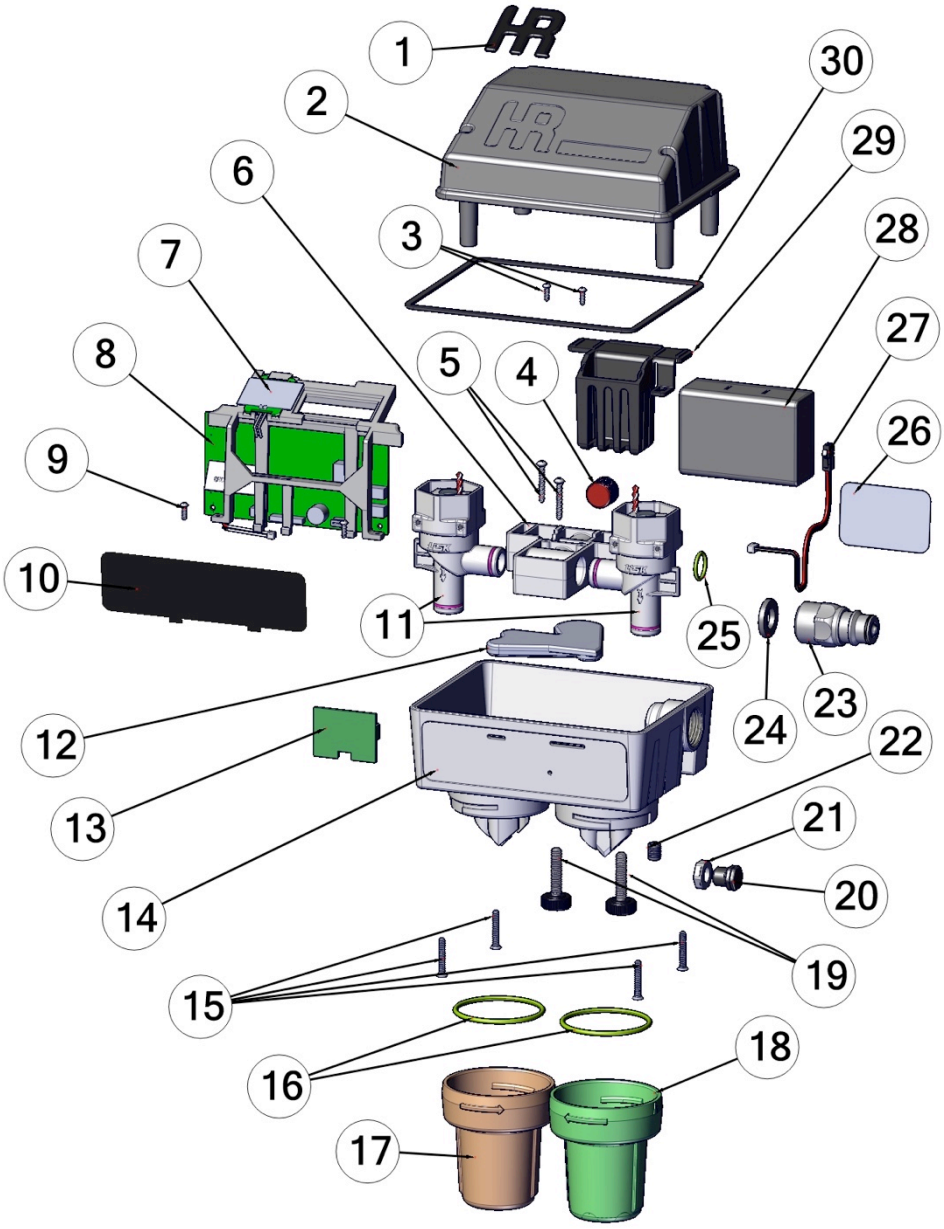

© COPYRIGHT HYDRA RINSE™ LLC | ALL RIGHTS RESERVED

2.2b - Wand Handle Assembly

Item #	Name
1	Wand Tip
2	O-Ring, Size 010
3	Wand Orifice
4	O-Ring, Size 008
5	Wand Elbow
6	Wand Extension Post
7	Wand Extension Nut
8	Wand Handle
9	¼” ID Spiral Hose – 30ft
10	Spring Tensioner

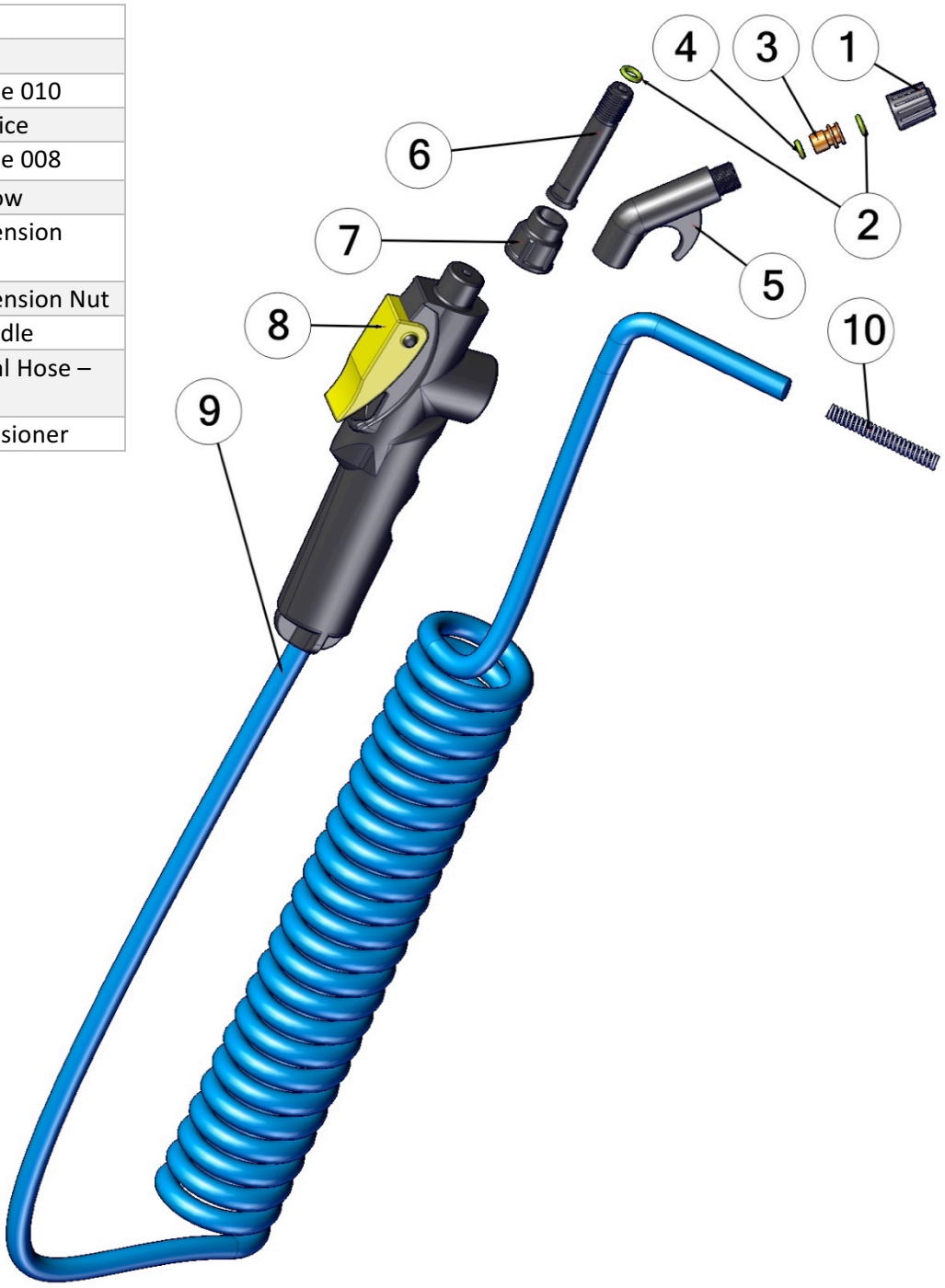

© COPYRIGHT HYDRA RINSE™ LLC | ALL RIGHTS RESERVED

2.2c - Wand Metering Assembly

Item #	Name
1	Wand Handle
2	Handle Pin
3	Wand Data Plate
4	Metering Assembly Top Cover
5	Grommet, Output
6	3/8 Liqui-fitting
7	Venturi
8	Metering Assembly Bottom Cover
9	Foam Seal
10	Check Valve Holder/Spring
11	Chemical Draw Tube
12	Chemical Filter
13	Assembly Screws
14	Spiral Metering Tip
15	Check Valve
16	O-Ring, Venturi
17	Check Valve
18	Venturi Adapter Screws
19	Venturi Adapter
20	Grommet, Input
21	3/8” PTC X NPT

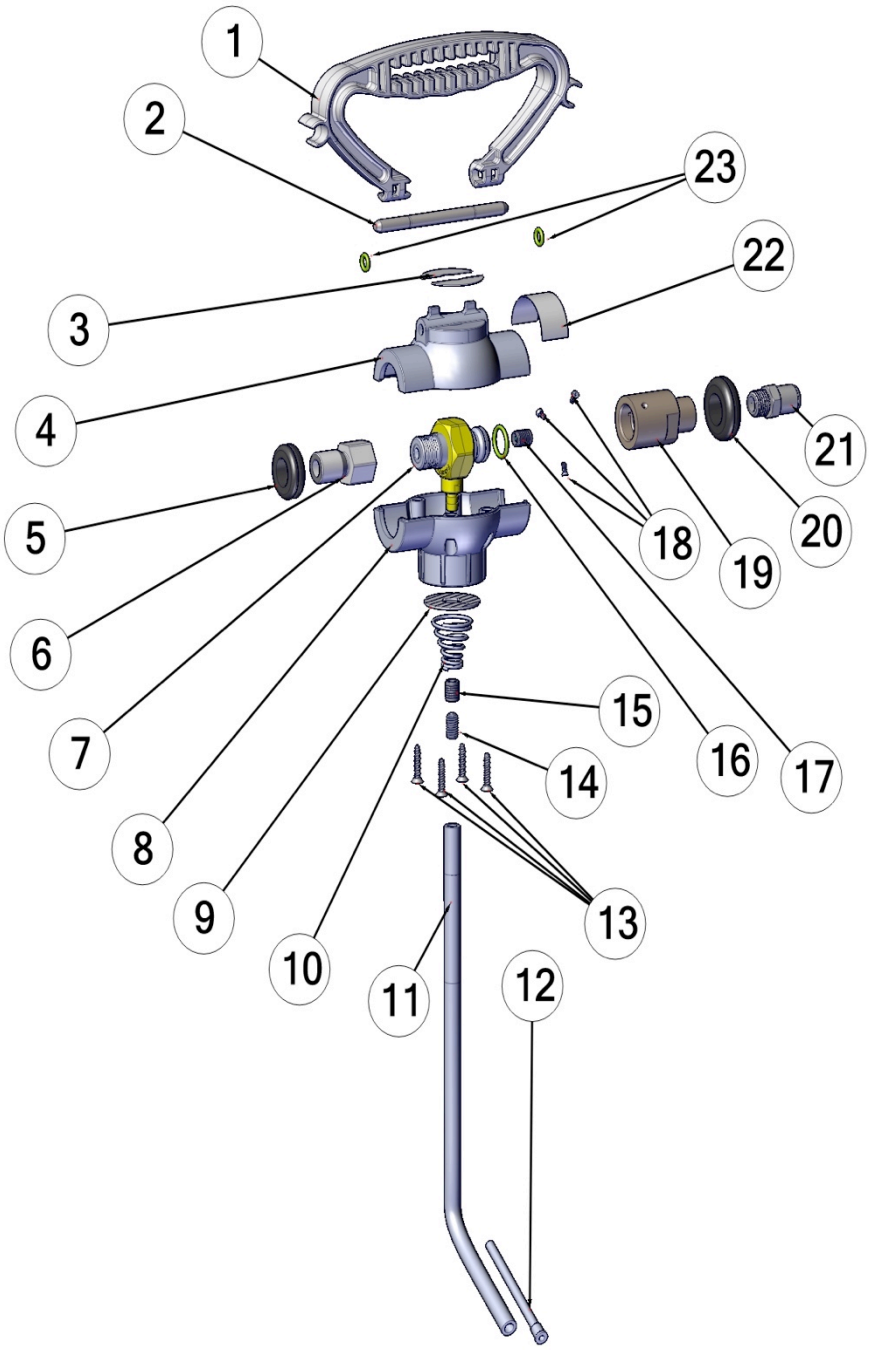

© COPYRIGHT HYDRA RINSE™ LLC | ALL RIGHTS RESERVED

Section 3 - System Details

3.1 - Key Components Description

3.1a – Keypad/User Interface

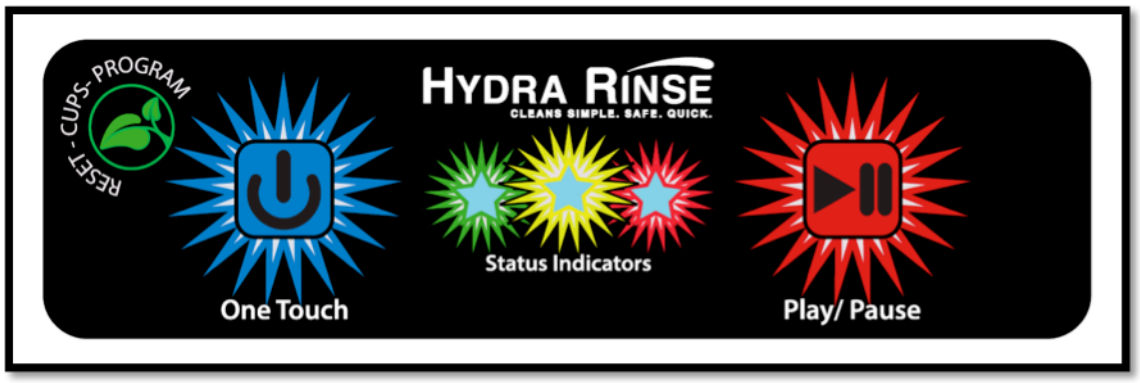

Part Name	Keypad/User Interface
Function	Activates, Pauses/Resumes functions of Pro-Control. Used to register Tokens, program module and to reset.
Details	LED lights are visible to display operating status, available registered Wash Cycles and Error Codes.

© COPYRIGHT HYDRA RINSE™ LLC | ALL RIGHTS RESERVED

3.1b – Solution Cup Housings

Part Name	Solution Cup Housings
Function	Houses individual solution cups for use during cleaning and sanitizing functions of Pro-Control.
Details	Unique left and right cups. Right cup is distinguished by floral pattern at base. Both cups have arrows on them indicating direction of travel and correct orientation.

© COPYRIGHT HYDRA RINSE™ LLC | ALL RIGHTS RESERVED

3.1c – HR Logo

Part Name	HR Logo
Function	RFID Reader
Details	Used to transmit RFID information from Token Tags and Program Tags (Not available to the field).

© COPYRIGHT HYDRA RINSE™ LLC | ALL RIGHTS RESERVED

3.1d – Token Tag

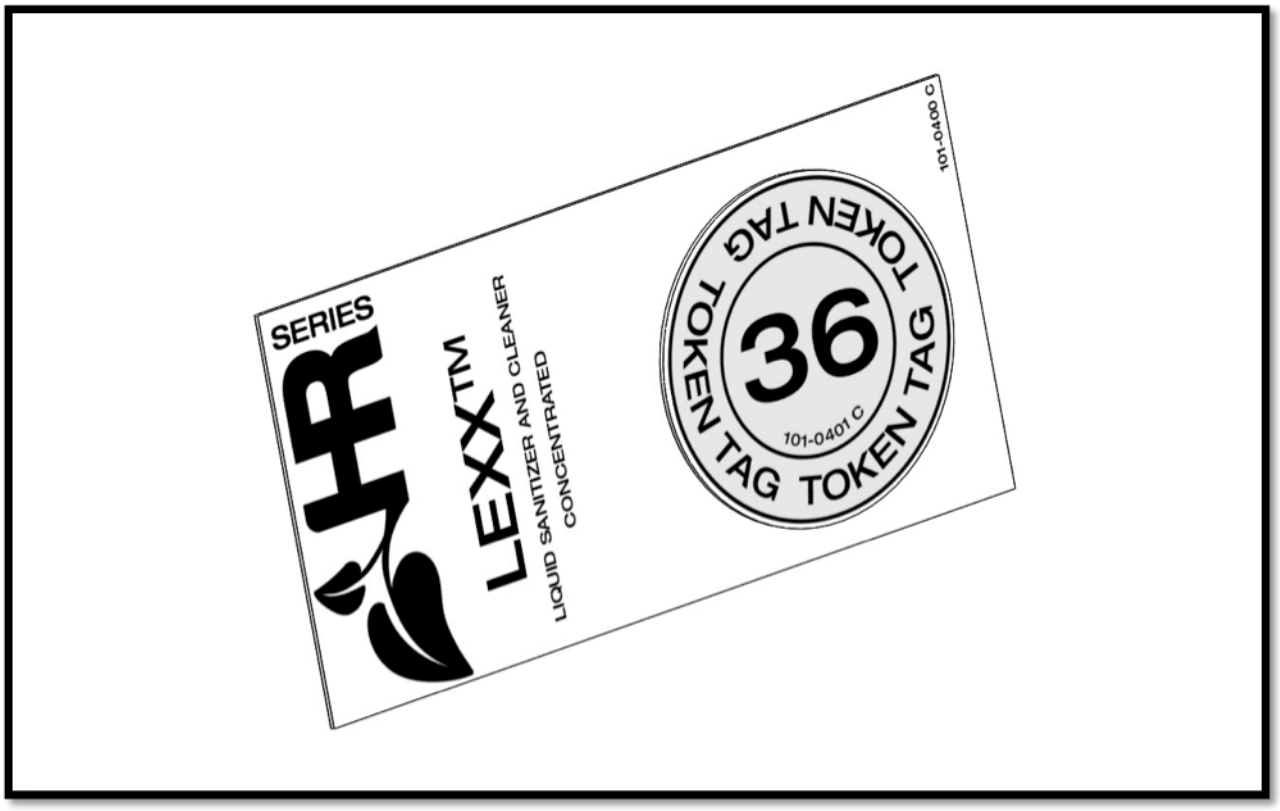

Part Name	Token Tag
Function	Provides Wash Cycles to be registered with Pro-Control Module.
Details	Each Token Tag contains 36 washes. A tag is placed against raised HR logo on top cover of Pro-Control to register washes.

© COPYRIGHT HYDRA RINSE™ LLC | ALL RIGHTS RESERVED

3.1e – Manifold 20

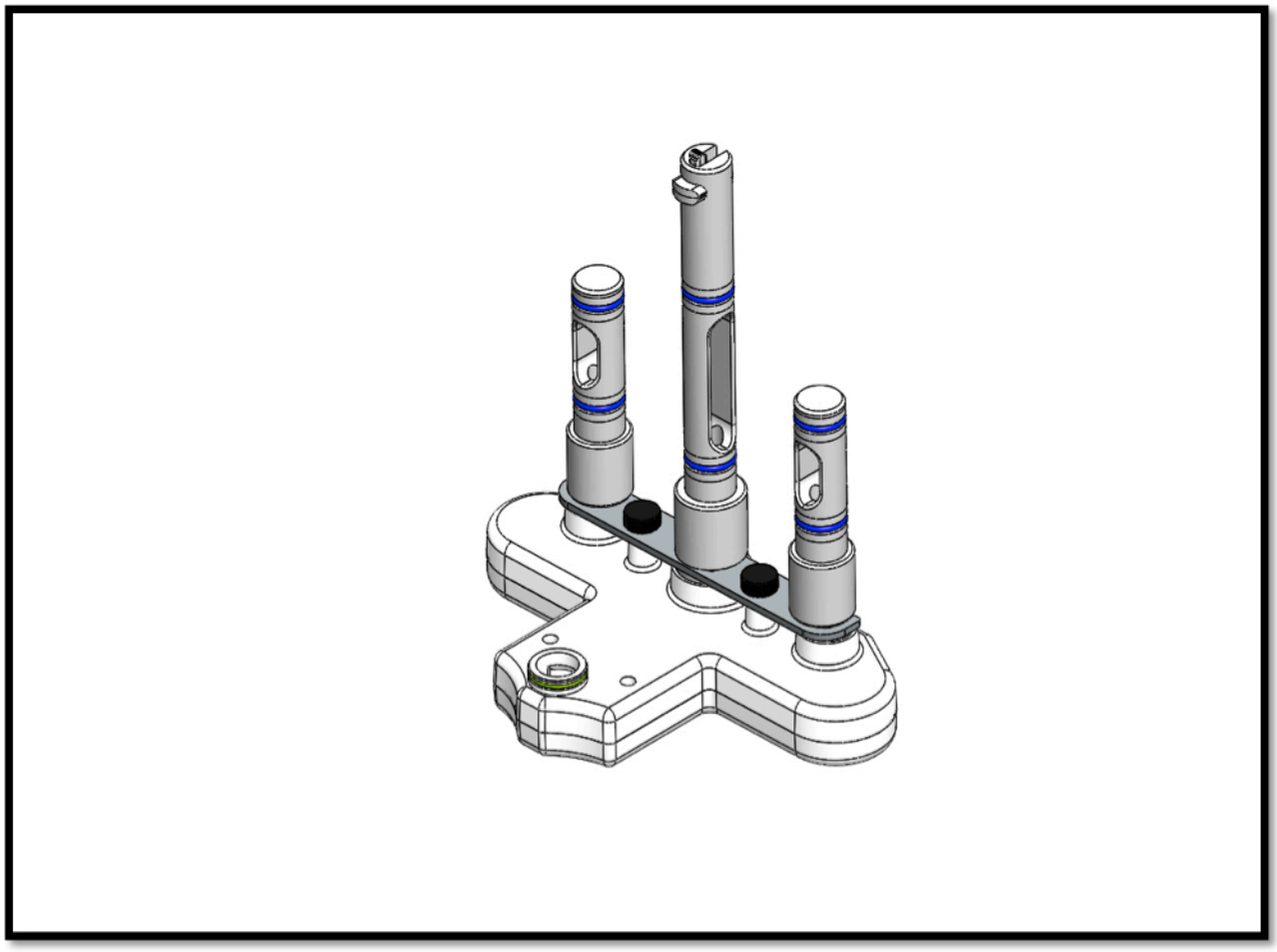

Part Name	Manifold
Function	Connects Pro-Control Module to host Soft-Serve machine.
Details	Inserted into freezer door in place of draw valve(s). Can be disassembled for maintenance or manual cleaning of Pro-Control. O-rings should be replaced annually. See Part Lists for appropriate kit numbers.

© COPYRIGHT HYDRA RINSE™ LLC | ALL RIGHTS RESERVED

3.1f– Water Hose Supply

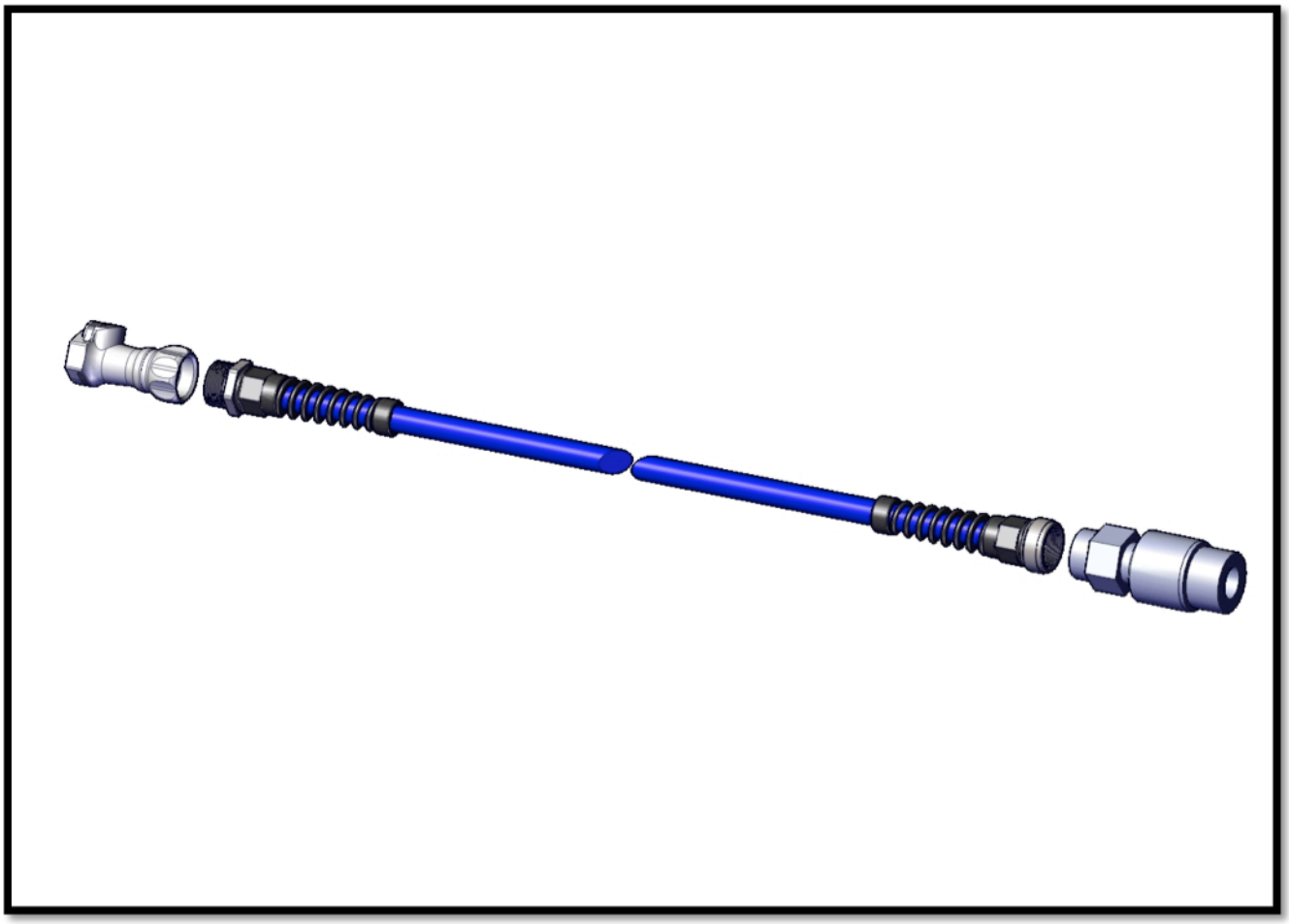

Part Name	Water Supply Hose
Function	Connects mixed water temperature source to Pro-Control. Reduces water pressure from source to functional level.
Details	30 PSI Water Pressure Regulator is included and attached to water supply hose. DO NOT OPERATE Hydra Rinse™ components without their required Pressure Reducers. The female quick connect at the end of the water supply hose is equipped with an internal shut-off to prevent water from leaking out when not connected to its male counterpart on the Pro-Control.

© COPYRIGHT HYDRA RINSE™ LLC | ALL RIGHTS RESERVED

3.1fg – Bypass Tube System

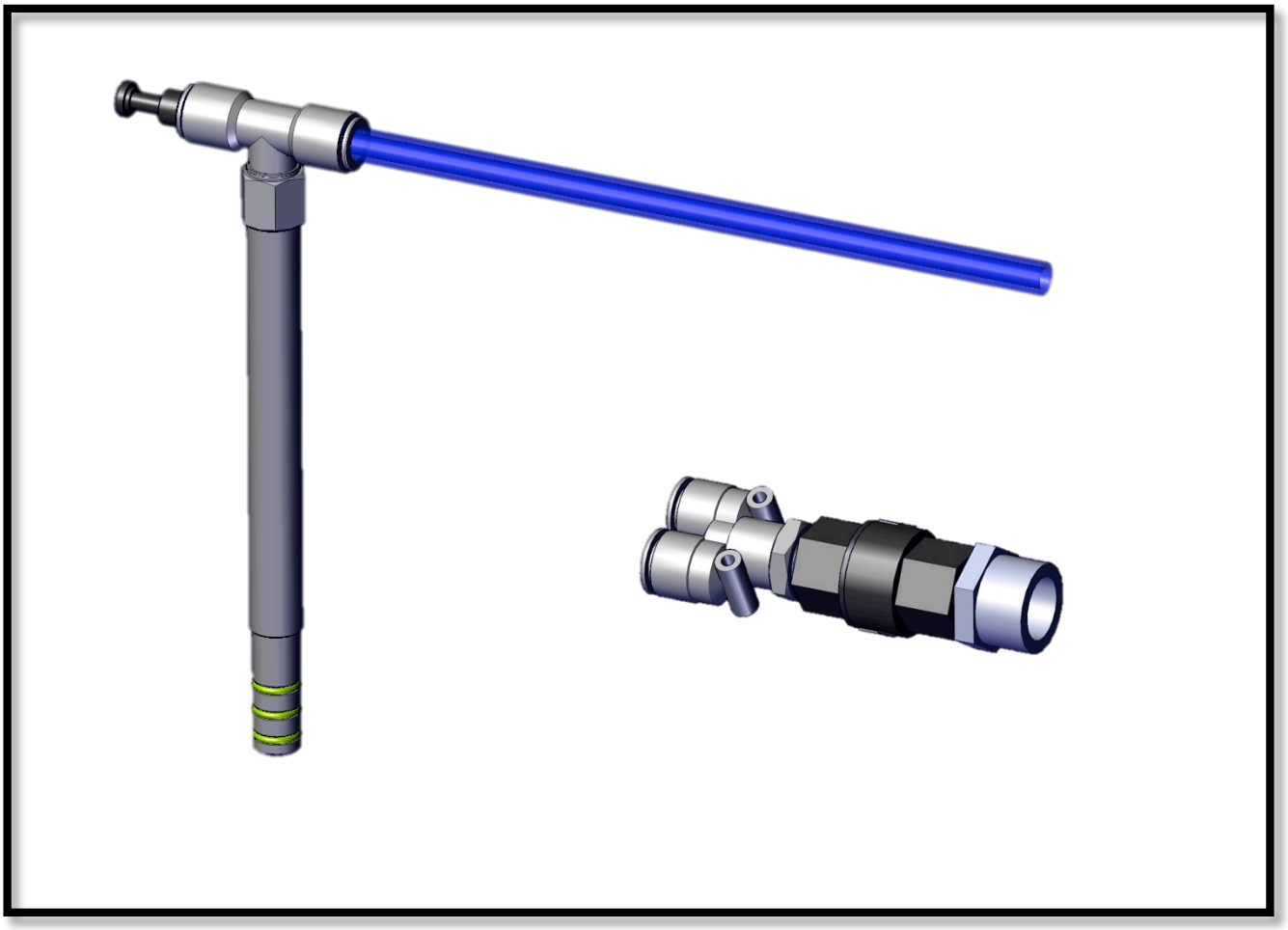

Part Name	Bypass Tube System
Function	Provides flow path for grey water, water, cleaning and sanitizing solution to drain from machine while Pro-Control is in use.
Details	Each Hopper Mix Inlet requires a Bypass Tube. The Bypass Tube System is equipped with a check valve to prevent backflow from the drain source.

© COPYRIGHT HYDRA RINSE™ LLC | ALL RIGHTS RESERVED

3.1h – WSF128-169 Metering Assembly

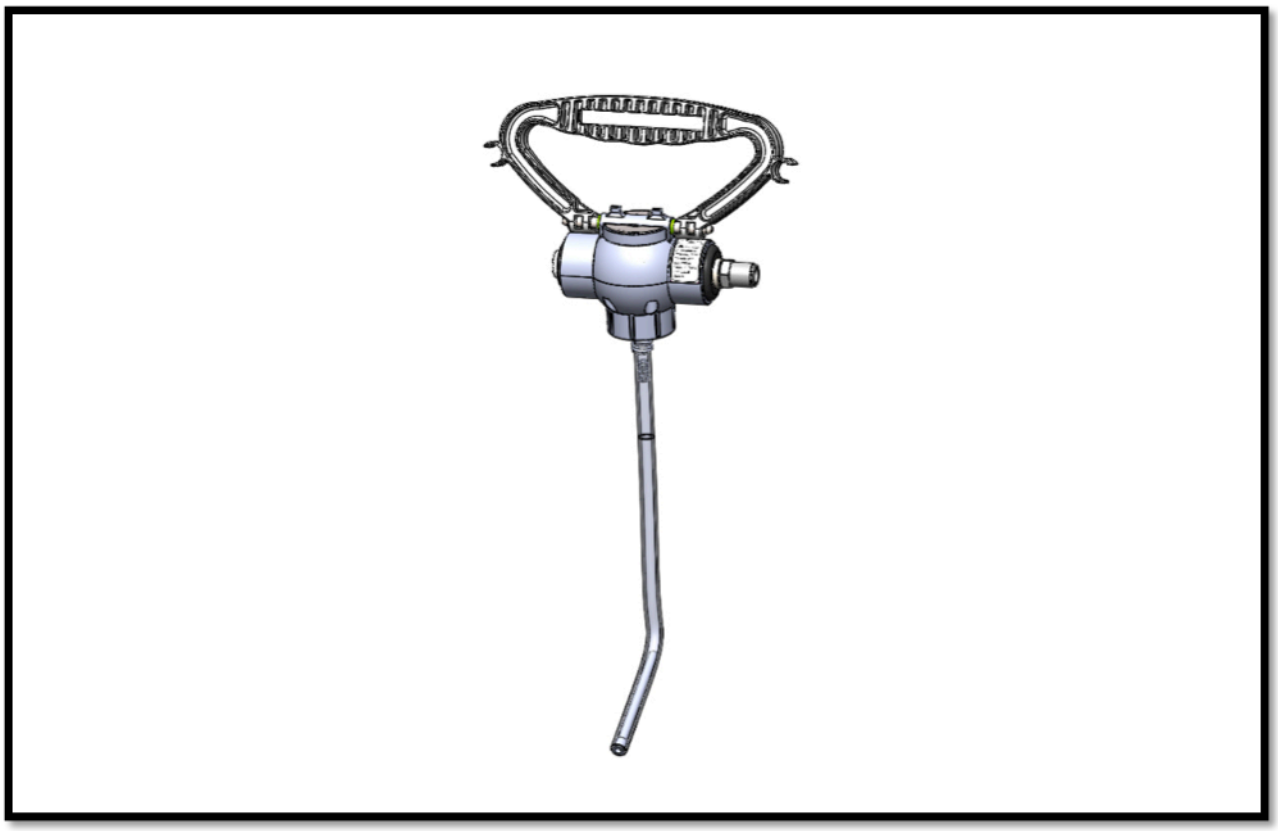

Part Name	WSF128-169 Metering Assembly
Function	Meters LEXX™ Sanitizing and Cleaning Solution with Domestic Water Supply.
Details	The Metering Assembly draws in LEXX™ Solution from the connected jug. The Metering Assembly has a built in check valve to prevent water from filling jug during use.

© COPYRIGHT HYDRA RINSE™ LLC | ALL RIGHTS RESERVED

3.1i – WSF128-169 Wand Handle Assembly

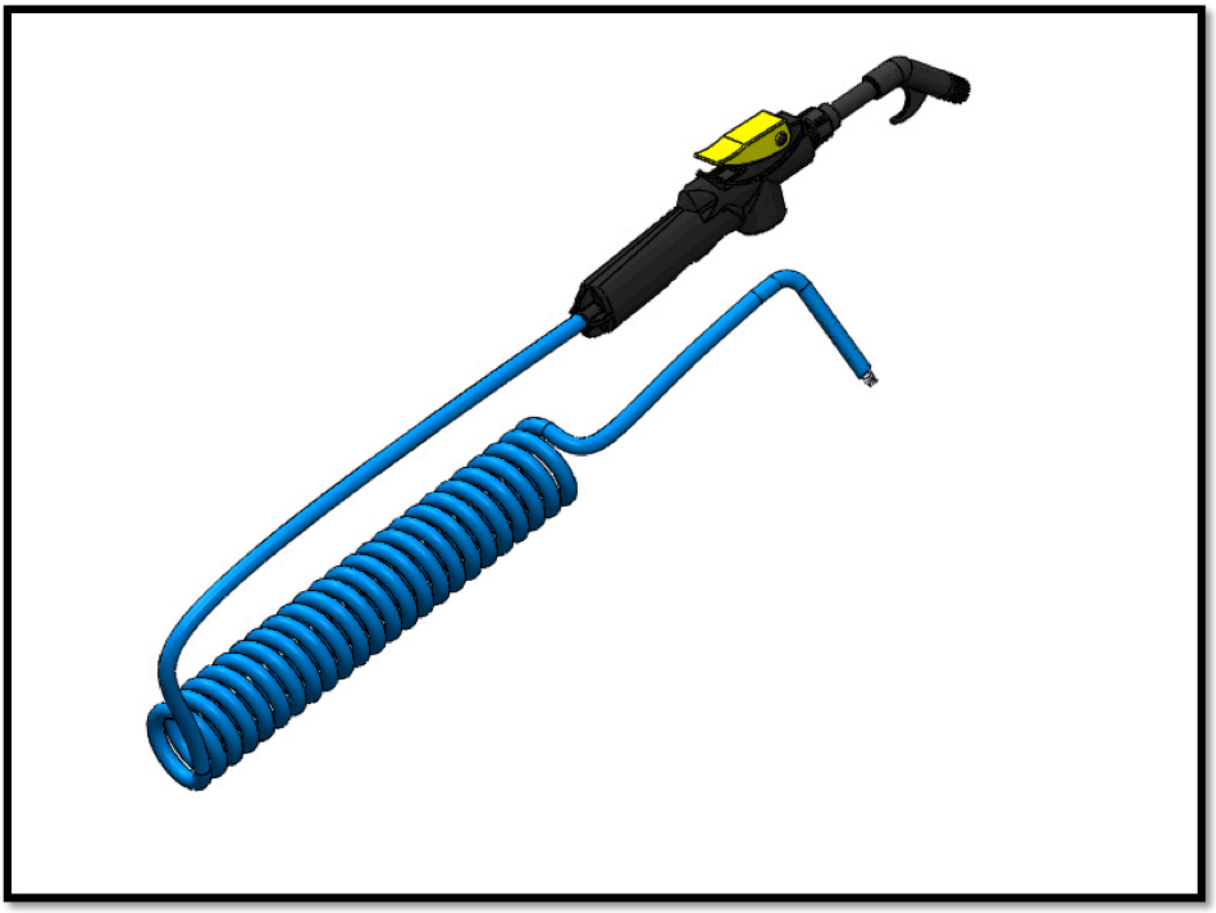

Part Name	WSF128-169 Wand Handle Assembly
Function	User-activated water and chemical dispensing device.
Details	Handle allows for momentary or continuous spray function. Creates “fan spread” of mix solution. Dispenses at .25 gallons per minute.

© COPYRIGHT HYDRA RINSE™ LLC | ALL RIGHTS RESERVED

3.1j – WSF128-169 Wand Hose Assembly

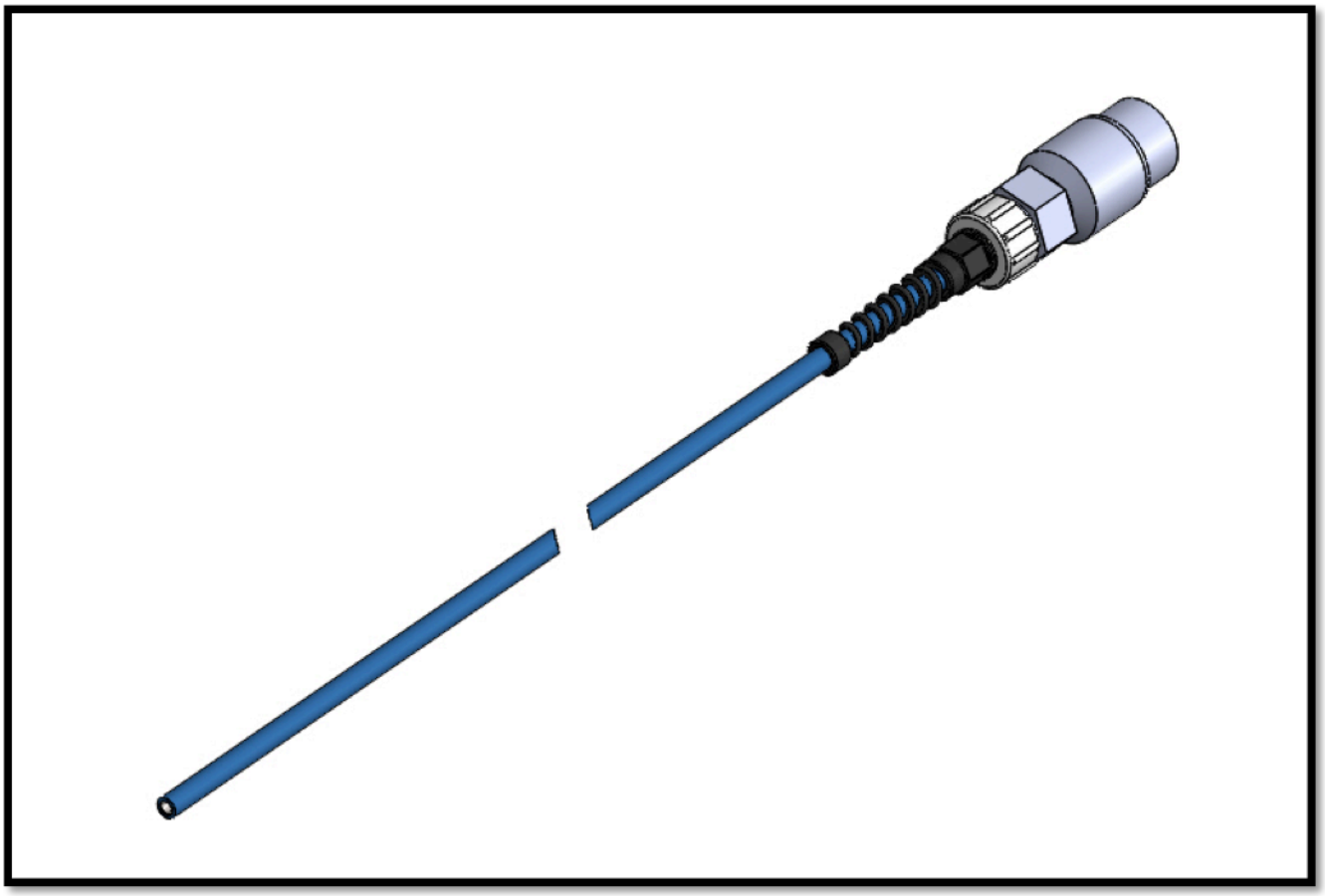

Part Name	WSF128-169 Wand Hose Assembly
Function	Connects mixed water temperature source to Wand Metering Assembly. Reduces water pressure from source to functional level.
Details	50 PSI Water Pressure Regulator is included and attached to Water Supply Hose. DO NOT OPERATE Hydra Rinse™ components without their required Pressure Reducers.

© COPYRIGHT HYDRA RINSE™ LLC | ALL RIGHTS RESERVED

Section 4 – Troubleshooting

4.1

LED Blink Codes				
	Green	Yellow	Red	Error
E1			F	No Tokens
E2			F	No Script
E3			S	Low Battery
E4			F	Memory Storage Full

- Solid ON

- OFF

- Flashing

F – Fast, S - Slow

© COPYRIGHT HYDRA RINSE™ LLC | ALL RIGHTS RESERVED

4.2 - Error Code List

4.2a - E1 – No Tokens

Error Conditions and Check Items

Error	Description
E1 – No Tokens	User attempted to begin cleaning cycle; Pro-Control does not have available wash tokens to start cleaning sequence.
Check Items	Place USED Token Tag on Pro-Control HR logo. Press RESET/CUPS/PROGRAM button. LED user interface will display available tokens. Open new case of LEXX™ Solution Cups. Remove Instructional Insert and retrieve Token Tag from Insert. Register new tokens.

4.2b - E2 – No Script

Error Conditions and Check Items

Error	Description
E2 – No Script	User attempted to begin cleaning cycle; Pro-Control displays error. Pro-Control is unable to begin cleaning sequence.
Check Items	Contact local distributor, authorized reseller or Hydra Rinse Service Department.

4.2c - E3 – Low Battery

Error Conditions and Check Items

Error	Description
E3 – Low Battery	User attempts to begin cleaning cycle; Pro-Control displays error.
Check Items	Perform battery replacement. Check age of batteries before installation. Inspect battery terminals for corrosion.

© COPYRIGHT HYDRA RINSE™ LLC | ALL RIGHTS RESERVED

4.2d - E4 – Memory Storage Full

Error Conditions and Check Items

Error	Description
E4 – Memory Storage Full	User attempted to register Token Tags; Pro-Control displays error. Pro-Control has reached maximum storage capacity of saved cleaning tokens.
Check Items	Place USED Token Tag on Pro-Control HR logo. Press RESET/CUPS/PROGRAM button. LED user interface will display available tokens. Onboard memory can store up to 750 wash tokens. If the Pro-Control Module storage is full, user will need to wait until enough washes have been depleted to accept the full token tag during registration. The Pro-Control Module is unable to accept partial registration. If the full amount of tokens cannot be registered, none will register.

© COPYRIGHT HYDRA RINSE™ LLC | ALL RIGHTS RESERVED

4.3 - Troubleshooting Guide by Symptom

Problem	Potential Issue	Potential Solve
Unit will not power up	・Check that batteries are correctly installed ・Corrosion on battery terminals	・Check and/or re-install batteries as required for proper operation ・Add Dielectric Grease to improve battery contact with terminals ・Contact local Distributor/Dealer for replacement
Water leak	・Improper engagement of fittings ・Loosely connected fittings ・Worn/damaged O-Ring, Gasket or Seal	・Disconnect and reinstall fitting(s) back into position ・Tighten leaking fitting manually/No tools ・Replace worn/damaged O-Ring, Gasket or Seal(s)
Cup Housing(s) are hard to tighten	・Worn or no Food Safe Lube present	・Re-lube with Food Safe Lube, replace O-Ring(s) if problem unresolved
Cup housing(s) leak	・Loose cup housings on Main Body ・Cup Seal worn, damaged or missing	・Ensure arrows on Cup Housings are aligned with arrows on Main Body ・Replace cup O-rings
Bypass Tube won't stay in Mix Inlet Hole	・O-Ring(s) worn ・Food safe Lube present ・Blocked Discharge Hose	・Replace O-Ring(s) ・Thoroughly scrub Mix Inlet Hole(s) with LEXX™ sanitizing and cleaning solution. ・Remove all lubricant from opening and Bypass Tube O-Rings ・Inspect Drain Hose for kinks or blockages ・Inspect Drain Check Assembly for obstructions, kink or stuck Check Valve
No Water Flow	・Water Supply not turned on ・Pro-Control Valves do not open ・Missing Pressure Regulator/Excessively high inlet pressure	・Inspect water source for flow, ensure water lines are open/active ・Perform Self Cleaning with no water pressure. ・Relieve static water pressure by shutting off water supply and manually depressing check valve on water supply hose, reattach to module ・Check water supply line for kinks or blockages
No signs of chemical in water discharge	・No foam or "suds" present when dispensing solution from wand ・No foam or "suds" present when	・Inspect gallon solution bottle, replace as needed ・Ensure solution cups have been

© COPYRIGHT HYDRA RINSE™ LLC | ALL RIGHTS RESERVED

	draining solution from Freezer Barrels	installed in Pro-Control and that lids pierced after insertion ・Perform self-cleaning on Pro-Control ・Draw warm water through chemical draw tube of Wand Metering Assembly ・Inspect Wand Metering Tip for obstructions
Machine fails pH test	・Test strip indicates unacceptable pH level after performing cleaning process	・Ensure solution Pods were present and pierced during Pro-Control operation ・Ensure Pro-Control is being used on correct model machine ・Ensure pH Test Strip is new and has been left exposed outside of Test Strip Packaging
Weak or low water pressure	・Water doesn't appear to have "pressure" when operating	・Ensure water supply is completely open ・Check building water pressure, ensure operating pressure is above 50 psi ・Inspect 30' Coil Hose for contamination ・Inspect Water Supply hose for kinks or blockage

© COPYRIGHT HYDRA RINSE™ LLC | ALL RIGHTS RESERVED

Section 5 – Inspection

5.1 - Visual Inspection

As a good practice, please take time to periodically inspect components for unforeseeable issues that may arise due to wear or damage (e.g. water lines, supply hoses). Hoses can be an obstacle resulting in tripping and/or falling hazards that result in injury. Always work carefully around hoses to avoid injury to anyone within direct and/or indirect contact.

Water can wreak havoc with compromised systems, especially near surroundings like electrical receptacles that are unprotected by ground fault circuit interruption (GFCI). Worn out extension cords can lead to electrical shock when exposed to water.

Observe O-Rings for discoloration, incorrect positioning, and small nicks or tears. Installed O-Rings should be inspected for twisting. Hydra Rinse™ also uses custom X-Rings. Visually inspect each X-Ring to ensure proper installation.

Torn O-Rings are typically attributed to insertion on the machine without necessary lubricant. Never install any O-Rings, X-Rings, Gaskets or Seals without wetting them first. Dispensing LEXX™ Sanitizing and Cleaning solution on these parts will greatly decrease any chance of premature failure.

© COPYRIGHT HYDRA RINSE™ LLC | ALL RIGHTS RESERVED

Section 6 – Maintenance

6.1 - Pro-Control

It is recommended to perform maintenance on the Pro-Control in two ways. Activate the "Self-Clean" function after each use, and replace worn O-Rings, Gaskets and Seals no less than every three months, or as needed.

6.1a - "SELF CLEAN"

The SELF CLEAN state is entered by pressing and holding the ONE TOUCH and PLAY/PAUSE buttons simultaneously for 5 seconds while unit is in SLEEP state. The unit will then beep 5 times.

In this state, the unit will perform a quick self-clean cycle by running the following sequence.

OPEN VALVE 1

DWELL FOR 10 SECONDS

CLOSE VALVE 1

DWELL FOR 5 SECONDS

OPEN VALVE 2

DWELL FOR 10 SECONDS

CLOSE VALVE 2

During this process, all three LEDs (GREEN, YELLOW, and RED) will be on solid to indicate the self-cleaning cycle is in process. After the self-clean cycle completes, the unit will return directly to the SLEEP state.

6.1b - Pro-Control Tune-up Kit

A separate kit can be purchased to replace worn or aging O-Rings, Gaskets and Seals for the Pro-Control and corresponding Manifold Assembly. Refer to included instructions on what and how to replace those items.

© COPYRIGHT HYDRA RINSE™ LLC | ALL RIGHTS RESERVED

6.2 - WSF128-169 Wandstation

Visual food residue should be removed from exposed surfaces of the WSF128-169 Portable Wandstation on a regular base using a clean, non-abrasive towel/brush and/or applicator that has been wetted with LEXX™. Simply wipe down until visibly clean.

It's imperative that the Wand itself is disassembled and inspected for sedimentation after every bottle of LEXX™ is used.

If your water supply is not treated with a water softener, the amount of deposit buildup will vary.

Proper maintenance of the Wand ensures that the product solution will be dispensed at the proper consistency.

NOTE: *If you notice a reduction in the amount of foam dispensed, refer to troubleshooting guide Section 22.*

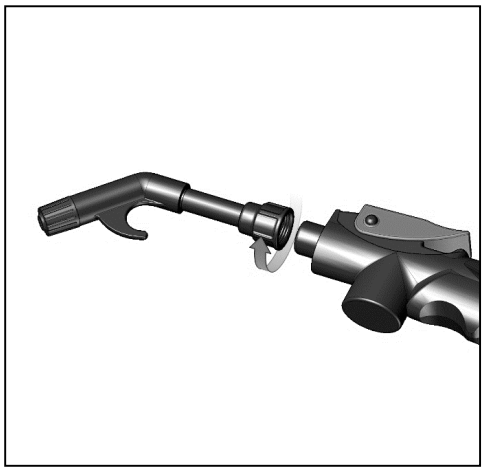

The Wand was designed for easy disassembly for quick serviceability. Disconnect the Wand Tip Assembly by rotating counter clockwise.

© COPYRIGHT HYDRA RINSE™ LLC | ALL RIGHTS RESERVED

Next, continue to further breakdown the Wand Tip Assembly into individual components.

Rotate both the Wand 45° Elbow and Wand Tip counter clockwise.

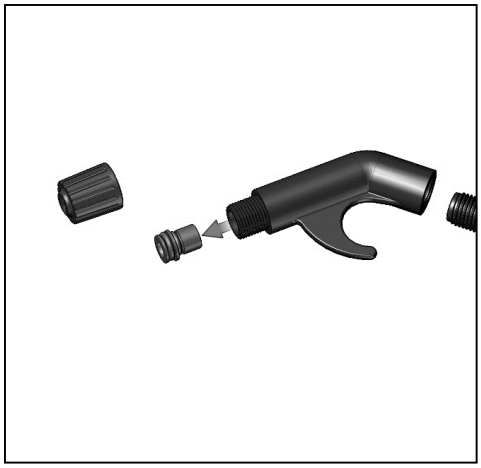

Residing beneath the Wand Tip is the Tip Orifice.

To remove, slightly twist while pulling on the Tip Orifice. Removing the Tip Orifice provides for necessary access to the Wand's 45° Elbow inner passage ways.

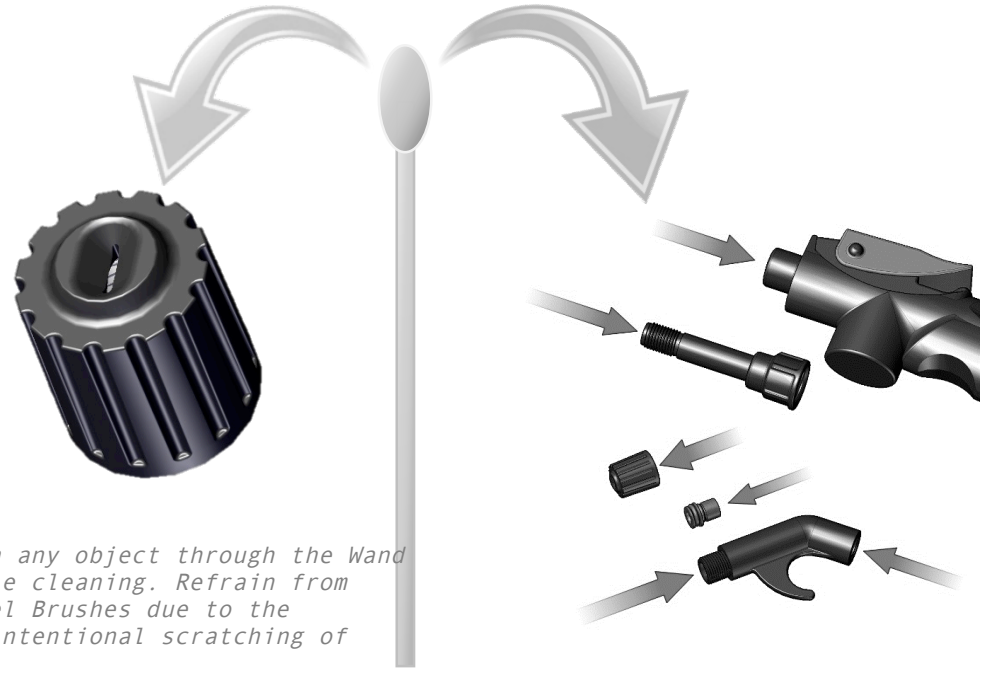

NOTE: *Never push any object through the Wand Tip opening while cleaning. Refrain from using mini Barrel Brushes due to the potential of unintentional scratching of surfaces.*

© COPYRIGHT HYDRA RINSE™ LLC | ALL RIGHTS RESERVED

Section 7 - Replacement of Parts

Hydra Rinse™ offers a full line of replacement and repair parts for all of its technology. Refer to the Component Diagram and Parts List of this manual for part numbers.

7.1 - Battery Replacement

Place on smooth flat surface

Remove Solution Cups

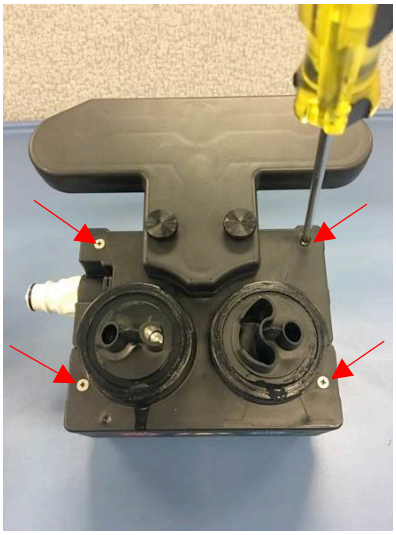

Remove (4) screws in Main Body

Remove Top Cover

Remove Battery Box Cover. Replace Batteries with (3) Dry Cell Batteries. Reverse steps to reassemble Module.

© COPYRIGHT HYDRA RINSE™ LLC | ALL RIGHTS RESERVED

Section 8 - Components Diagram and Part List

8.1 – WSF128-169 Wandstation

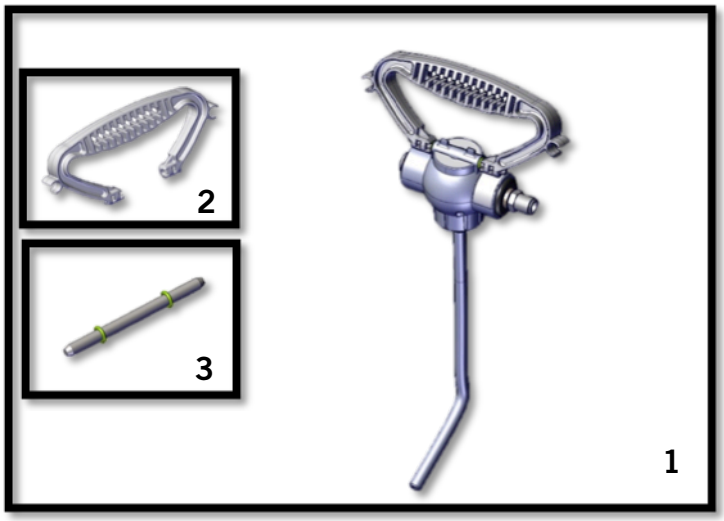

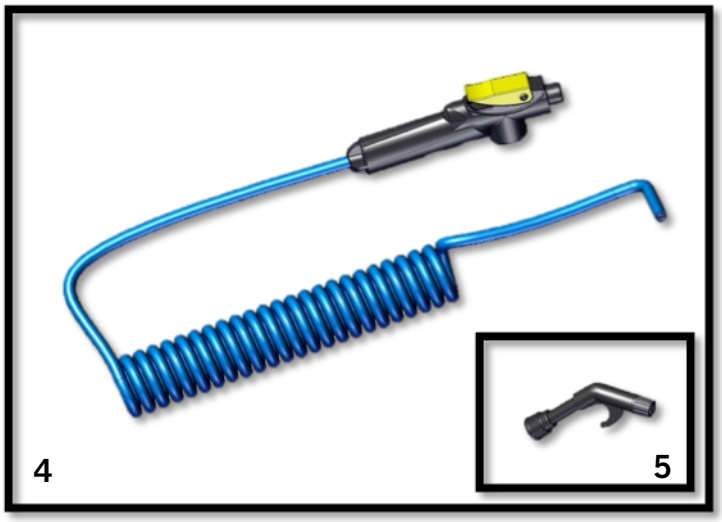

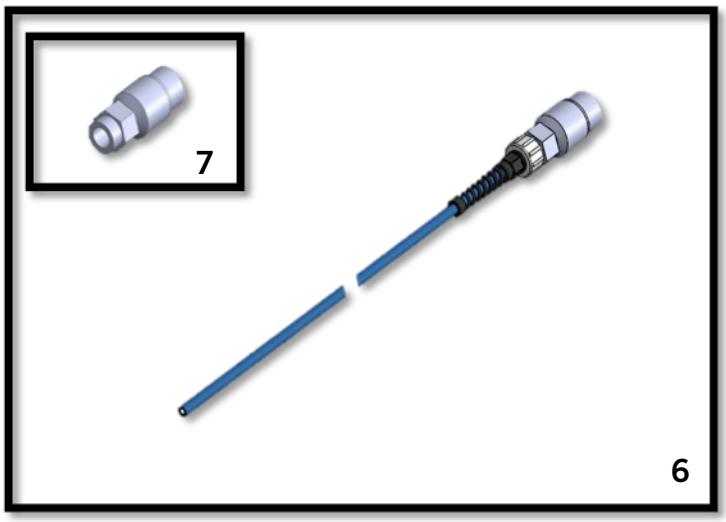

Item #	Name	Service Part #
1	Wand Metering Assembly	HRKT0016
2	Wand Handle	HRKT0015
3	Wand Handle Pin Kit	HRKT0014
4	Wand Spray Handle W/ Hose Assembly	HRKT0017
5	Wand Tip Assembly	HRKT0018
6	Wand Supply Hose Assembly	HRKT0020
7	Wand Pressure Reducer	HRKT0022

© COPYRIGHT HYDRA RINSE™ LLC | ALL RIGHTS RESERVED

8.2 - Pro-Control Module

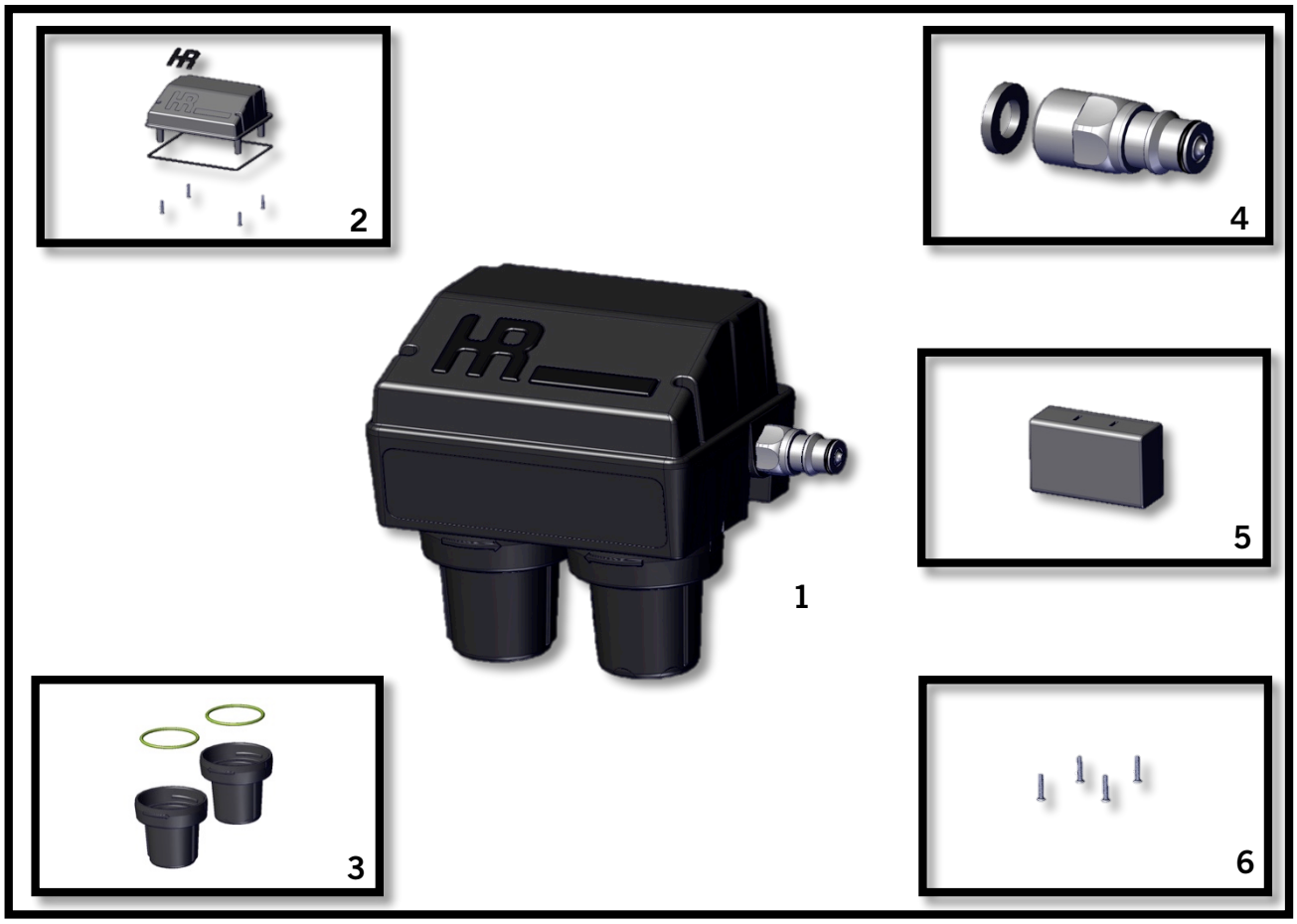

Item #	Name	Service Part #	Item #	Name	Service Part #
1	Pro-Control Module (336)	HRKT0023	2	Top Cover Replacement Kit	HRKT0001
	Pro-Control Module (358)	HRKT0024	3	Cup Housing Replacement Kit	HRKT0004
	Pro-Control Module (712)	HRKT0025	4	Main Body Supply Connection	HRKT0011
	Pro-Control Module (713)	HRKT0026	5	Battery Case	HRKT0002
	Pro-Control Module (722)	HRKT0027	6	Main Body Screws	HRKT0003
	Pro-Control Module (723)	HRKT0028			
	Pro-Control Module (794)	HRKT0013			

© COPYRIGHT HYDRA RINSE™ LLC | ALL RIGHTS RESERVED

8.3 - Manifold

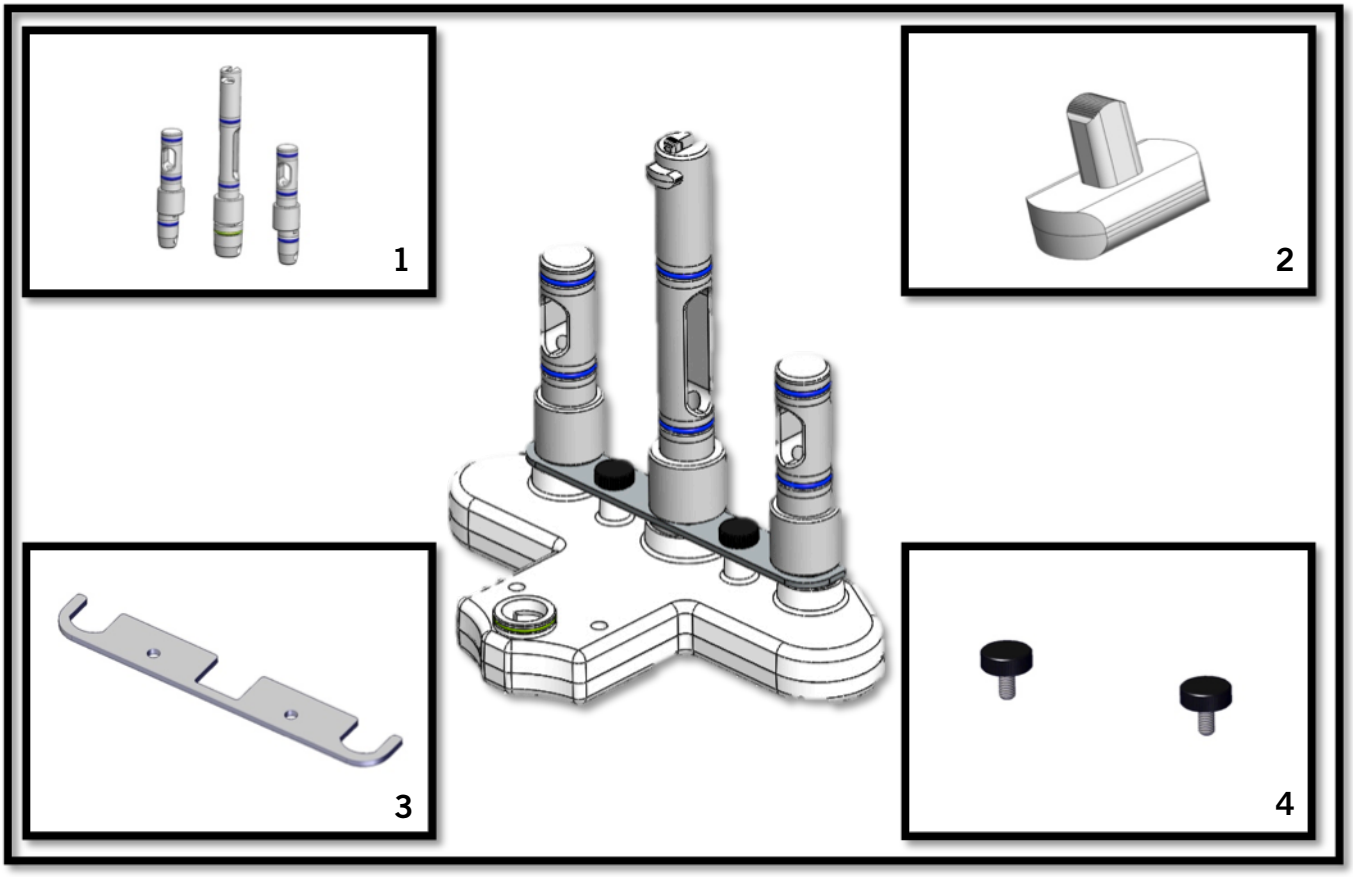

Item #	Name	Service Part #	Item #	Name	Service Part #
1	Manifold Pistons (336, 712, 713, 722, 723, 794)	HRKT0034	2	Keeper Slide (336, 712, 713, 722, 723, 794)	HRKT0032
	Manifold Pistons (706)	HRKT0035		Keeper Slide (358)	HRKT0033
	Manifold Pistons (358)	HRKT0036	3	Retainer Plate	HRKT0012
			4	Retainer Plate Thumb Screws	HRKT0010

© COPYRIGHT HYDRA RINSE™ LLC | ALL RIGHTS RESERVED

8.4 - Bypass Systems

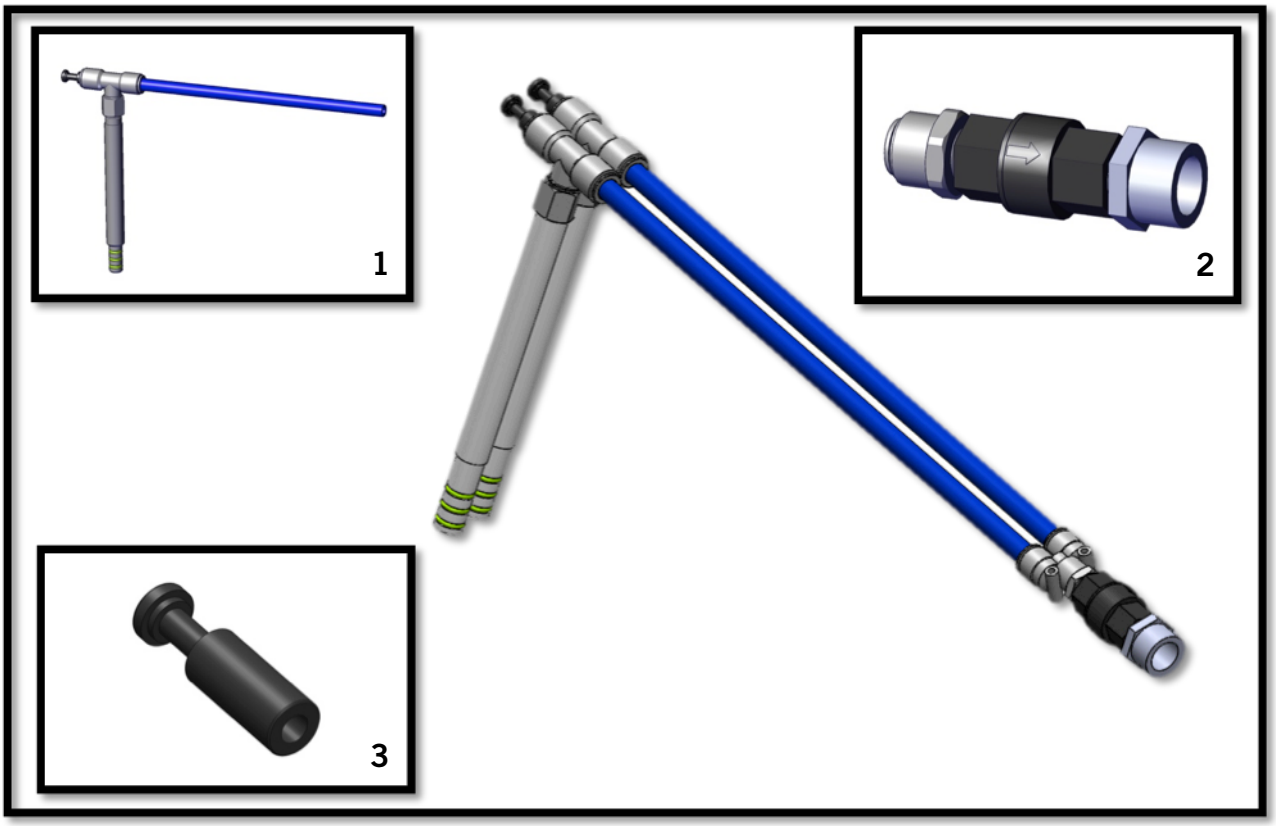

1	Bypass Tube (336)	HRKT0019
	Bypass Tube (358, 706, 712, 713, 722, 723, 794)	HRKT0006
2	Single Barrel Check Assembly	HRKT0007
	Dual Barrel Check Assembly	HRKT0021
3	Push to Connect Plug, ½”	HRKT0040

© COPYRIGHT HYDRA RINSE™ LLC | ALL RIGHTS RESERVED

8.5 - Consumables

8.5a - Pro-Control Tune-Up Kits

Item #	Name	Service Part #
1	Pro-Control Tune-Up Kit (336, 712, 713, 722, 723, 794)	HRKT0037
2	Pro-Control Tune-Up Kit (706)	HRKT0038
3	Pro-Control Tune-Up Kit (358)	HRKT0039

8.5b - Machine Tune-Up Kits

Item #	Name	Catalog #
1	Machine Tune-Up Kit (712, 722)	TAYHRTK712
2	Machine Tune-Up Kit (706)	TAYHRTK706
3	Machine Tune-Up Kit (358)	TAYHRTK358
4	Machine Tune-Up Kit (713, 723)	TAYHRTK713
5	Machine Tune-Up Kit (794)	TAYHRTK794
6	Machine Tune-Up Kit (336)	TAYHRTK336

8.5c - Machine Upgrade Kits

Item #	Name	Catalog #
1	Machine Upgrade Kit (712, 722)	TAYHRUK712
2	Machine Upgrade Kit (706)	TAYHRUK706
3	Machine Upgrade Kit (358)	TAYHRUK358
4	Machine Upgrade Kit (713, 723)	TAYHRUK713
5	Machine Upgrade Kit (794)	TAYHRUK794
6	Machine Upgrade Kit (336)	TAYHRUK336

© COPYRIGHT HYDRA RINSE™ LLC | ALL RIGHTS RESERVED

8.5d - Chemical and Wipes

Item #	Name	Catalog #
1	LEXX™ Sanitizing and Cleaning Solution, Gallon Jug (1 Case – 4 Gallons)	HRLEXX4G
2	LEXX™ Sanitizing and Cleaning Solution, Individual Solution Cups (1Case – 36 Washes)	HRLEXXCUPS72
3	Hydra Rinse™ Wipes (1 Case, 6 Canisters)	HRWIPES

8.6 - Accessories

Item #	Name	Service Part #
1	Pro-Control Water Supply Hose	HRKT0005
2	Wand Water Supply Hose	HRKT0020
3	30 PSI Pressure Regulator	HRKT0022
4	50 PSI Pressure Regulator	HRTK0041
5	LEXX™ Test Strips	HRKT0029
6	Wand Mount Latch	HRKT0030
7	Wand Mount Bracket	HRKT0031

© COPYRIGHT HYDRA RINSE™ LLC | ALL RIGHTS RESERVED

Section 9 – Warranty

9.1 - WSF128-169 Portable Wandstation

The Seller warrants the WSF128-169 Portable Wandstation will operate or substantially perform within the published specifications and be free from material and workmanship defects when subjected to normal, proper and intended usage by properly trained personnel, for a period of 90 days from the date of shipment to Buyer (the "Warranty Period").

Seller agrees during the Warranty Period to repair or replace, at Seller's option, defective item(s) to allow the WSF128-169 Portable Wandstation to operate or substantially perform within the published specifications; provided the Buyer (a) promptly notifies the Seller in writing when the defect is discovered and provides Seller the product model, serial number and details of the warranty claim; and (b) after Seller's review, Seller will provide Buyer with service data and/or a Return Merchandise Authorization (“RMA”), which may include product-specific handling instructions. At that time, the Buyer may return the defective item(s) to Seller with all return shipping costs paid by Seller. The Seller has the option to use new or refurbished replacement parts for warranty work. All replaced parts become the property of Seller. Shipment to Buyer of repaired or replacement parts/equipment will be made in accordance with the Seller’s delivery policy.

The Seller has no obligation to make repairs, replacements or corrections, in whole or in part, as the result of: (i) normal wear and tear; (ii) accident, disaster or force majeure; (iii) the Buyer’s misuse of the WSF128-169 Portable Wandstation or the Buyer’s negligence; (iv) use of the WSF128-169 Portable Wandstation in a manner for which it was not designed or intended; (v) external causes such as, but not limited to, power failure or electrical power surges; (vi) improper storage or handling of the WSF128-169 Portable Wandstation by Buyer; or (vii) use of the WSF128-169 Portable Wandstation in combination with equipment not purchased directly from the Seller.

Any installation, maintenance, repair, service, relocation or alteration, or other tampering with, the WSF128-169 Portable Wandstation performed by any individual or entity other than the Seller, without Seller’s prior written approval, or any use of replacement parts not supplied by Seller, shall immediately void and cancel this warranty. This warranty entitles you to specific rights, and you may also have other rights, which differ from state to state. No other warranties shall apply.

© COPYRIGHT HYDRA RINSE™ LLC | ALL RIGHTS RESERVED

9.2 - Pro-Control

The Seller warrants that the TAYHR will operate or substantially perform within the published specifications and be free from material and workmanship defects, when subjected to normal, proper and intended usage by properly trained personnel, for a period of 90 days from the date of shipment to Buyer (the "Warranty Period").

Seller agrees during the Warranty Period, to repair or replace, at Seller's option, defective item(s) to allow the TAYHR to operate or substantially perform within the published specifications; provided the Buyer (a) promptly notifies the Seller in writing when the defect is discovered and provides Seller the product model, serial number and details of the warranty claim; and (b) after Seller's review, Seller will provide Buyer with service data and/or a Return Merchandise Authorization ("RMA"), which may include product-specific handling instructions. At that time, the Buyer may return the defective item(s) to Seller with all return shipping costs paid by Seller. The Seller has the option to use new or refurbished replacement parts for warranty work. All replaced parts become the property of Seller. Shipment to Buyer of repaired or replacement parts/equipment will be made in accordance with the Seller's delivery policy.

The Seller has no obligation to make repairs, replacements or corrections, in whole or in part, as the result of: (i) normal wear and tear; (ii) accident, disaster or force majeure; (iii) the Buyer's misuse of the TAYHR or the Buyer's negligence; (iv) use of the TAYHR in a manner for which it was not designed or intended; (v) external causes such as, but not limited to, power failure or electrical power surges; (vi) improper storage or handling of the TAYHR by Buyer; or (vii) use of the TAYHR in combination with equipment not purchased directly from the Seller.

Any installation, maintenance, repair, service, relocation or alteration, or other tampering with, the TAYHR performed by any individual or entity other than the Seller, without Seller's prior written approval, or any use of replacement parts not supplied by Seller, shall immediately void and cancel this warranty. This warranty entitles you to specific rights, and you may also have other rights, which differ from state to state. No other warranties shall apply.

© COPYRIGHT HYDRA RINSE™ LLC | ALL RIGHTS RESERVED

Intentionally Blank

101-0695 A

© COPYRIGHT HYDRA RINSE™ LLC | ALL RIGHTS RESERVED

HYDRA RINSE
CLEANS SIMPLE. SAFE. QUICK.

Standardizing Innovation

Need further assistance? Contact us…

Hydra Rinse 7870 Lehigh Crossing Rd, Victor, NY 14564

(844)233-6349 service@hydrarinse.com

© COPYRIGHT HYDRA RINSE™ LLC | ALL RIGHTS RESERVED